Transport Layer

Peler Levinsky, Roskilde IT

24.10.2021

Transport level

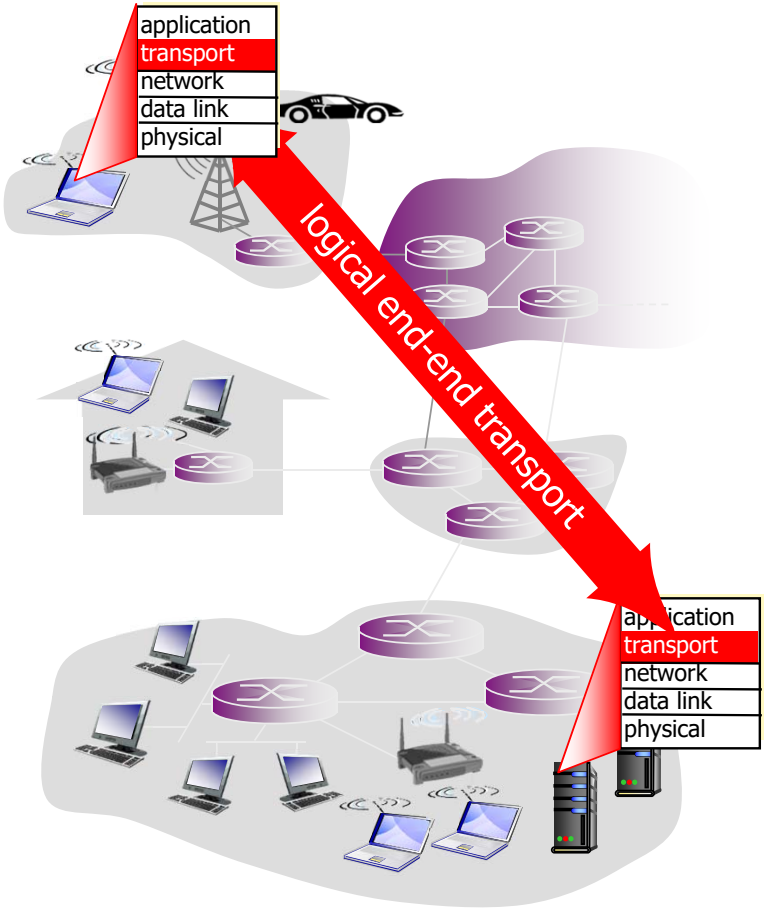

Multiplexing/demultiplexing

multiplexing at sender:
handle data from multiple sockets, add transport header (later used for demultiplexing)

demultiplexing at receiver:
use header info to deliver received segments to correct socket

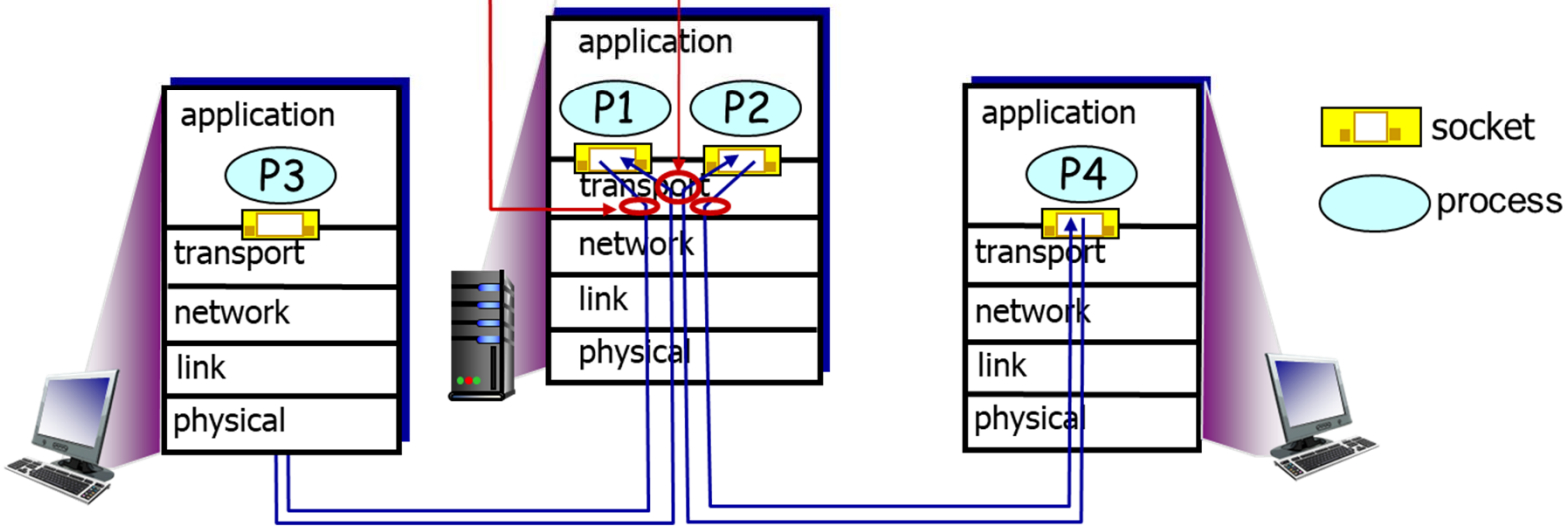

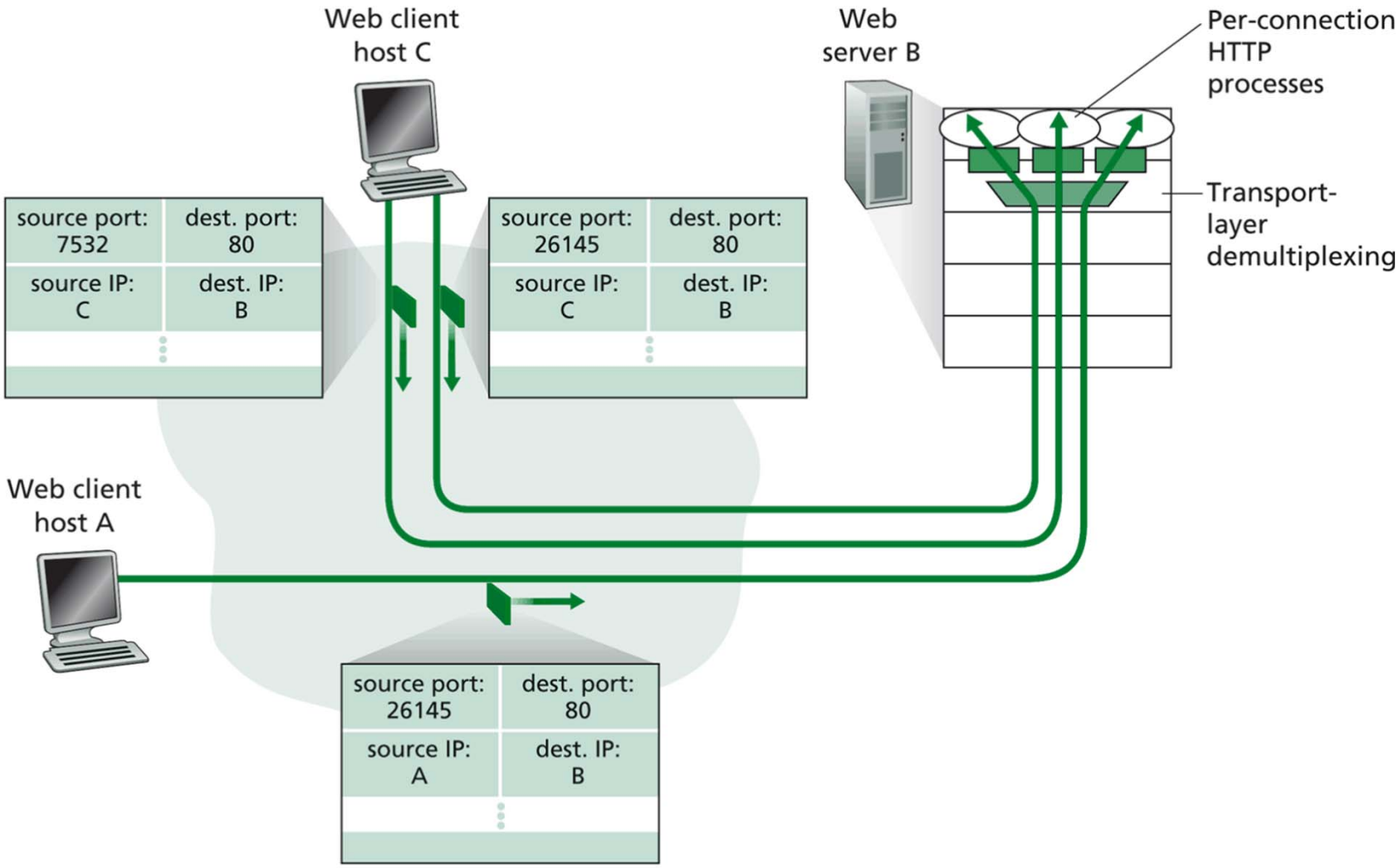

Figure 3.5 ♦ Two clients, using the same destination port number (80) to communicate with the same Web server application

UDP: segment header

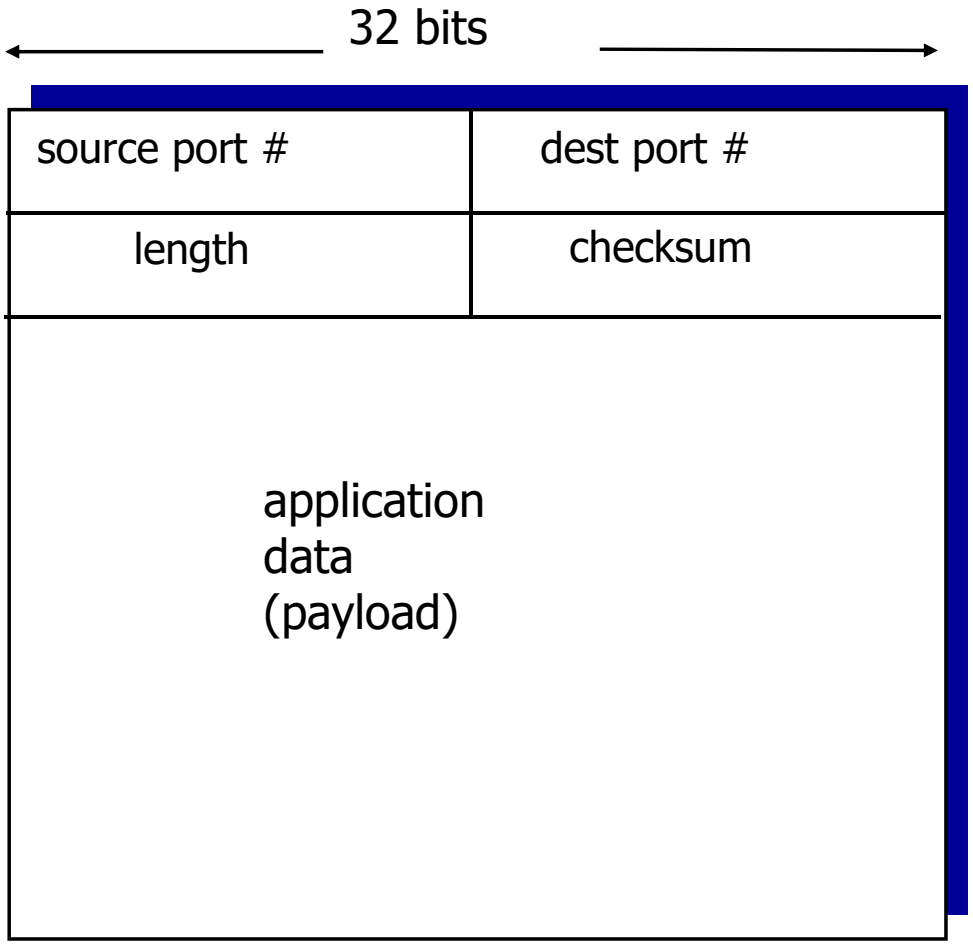

UDP segment format

Internet checksum: example

example: add two 16-bit integers

	1	1	1	0	0	1	1	0	0	1	1	0	0	1	1	0
	1	1	0	1	0	1	0	1	0	1	0	1	0	1	0	1
wraparound	1	1	0	1	1	1	0	1	1	1	0	1	1	1	0	1	1
sum		1	0	1	1	1	0	1	1	1	0	1	1	1	1	0	0
checksum		0	1	0	0	0	1	0	0	0	1	0	0	0	0	1	1

Note: when adding numbers, a carryout from the most significant bit needs to be added to the result

TCP segment structure (TCP Header)

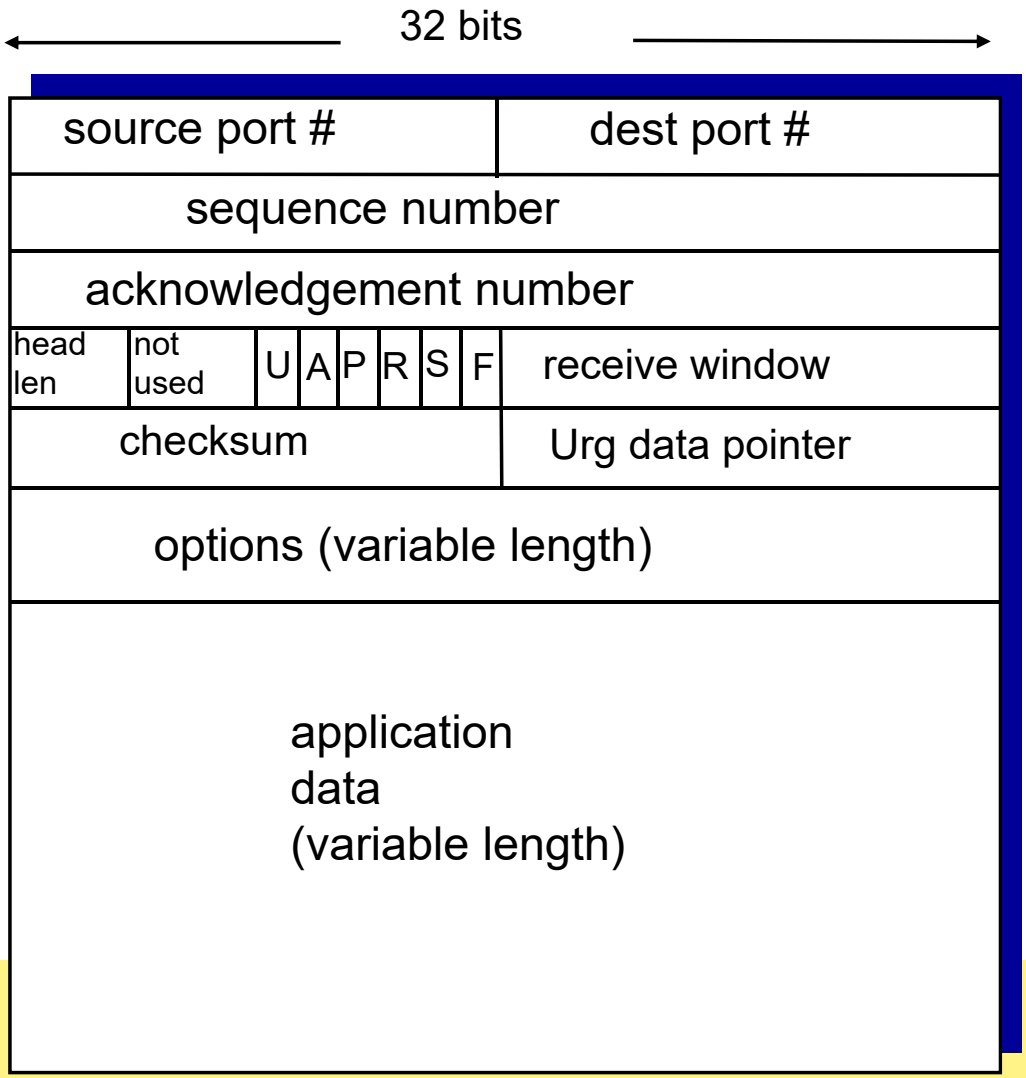

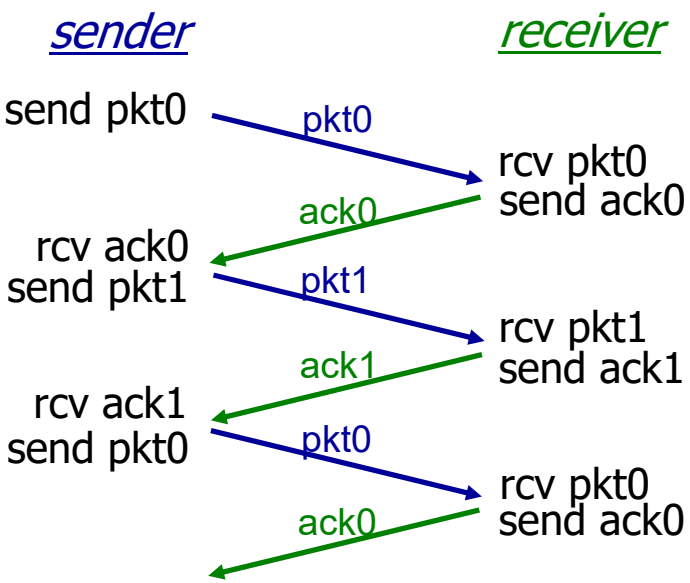

(a) no loss

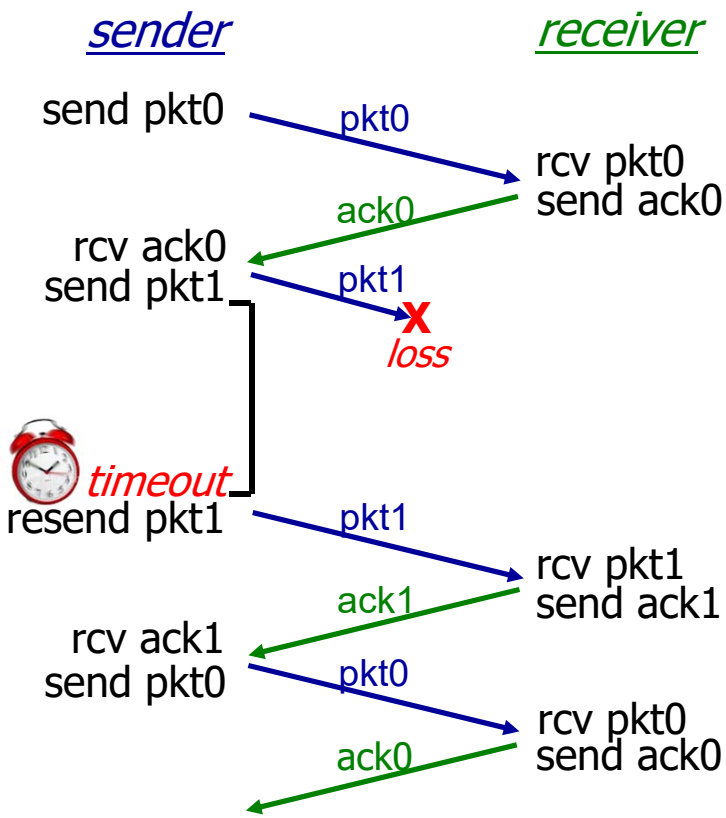

(b) packet loss

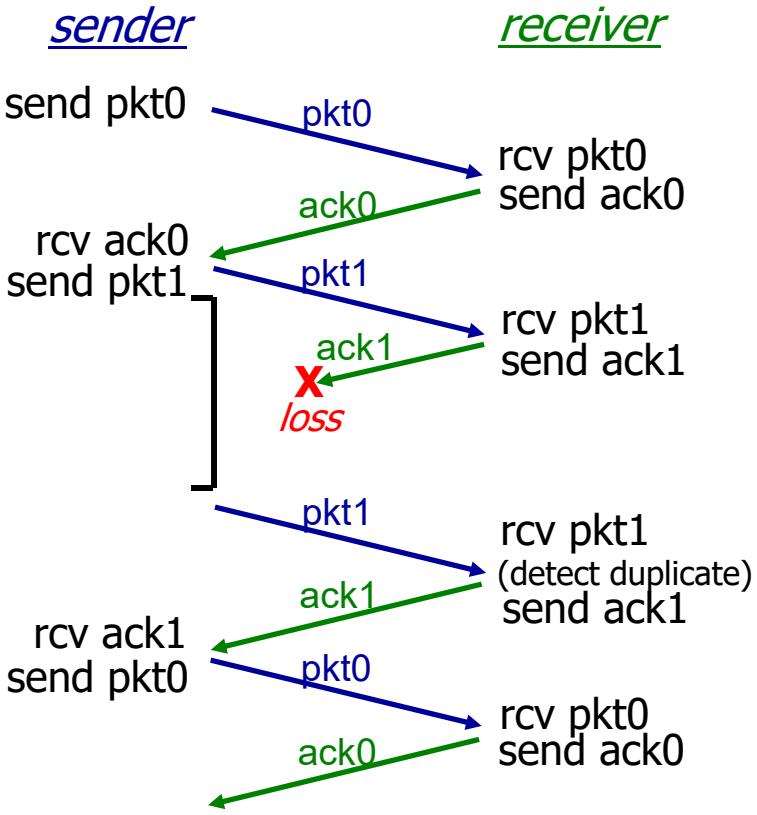

(c) ACK loss

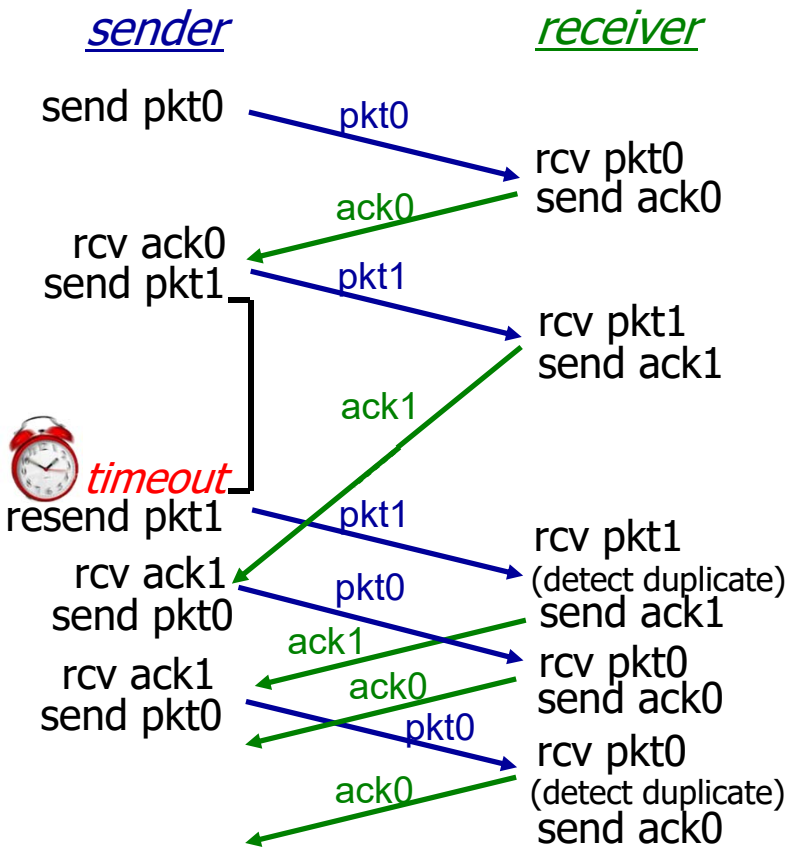

(d) premature timeout/ delayed ACK

TCP seq. numbers, ACKs

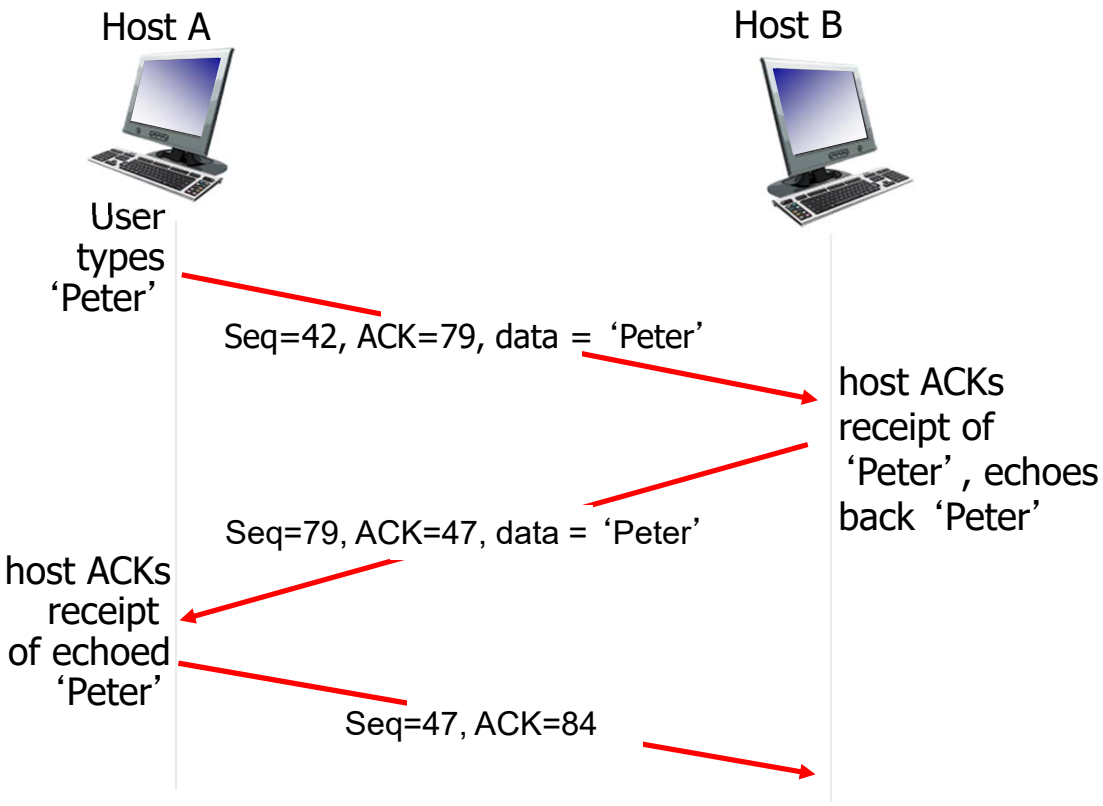

simple telnet scenario

TCP 3-way handshake

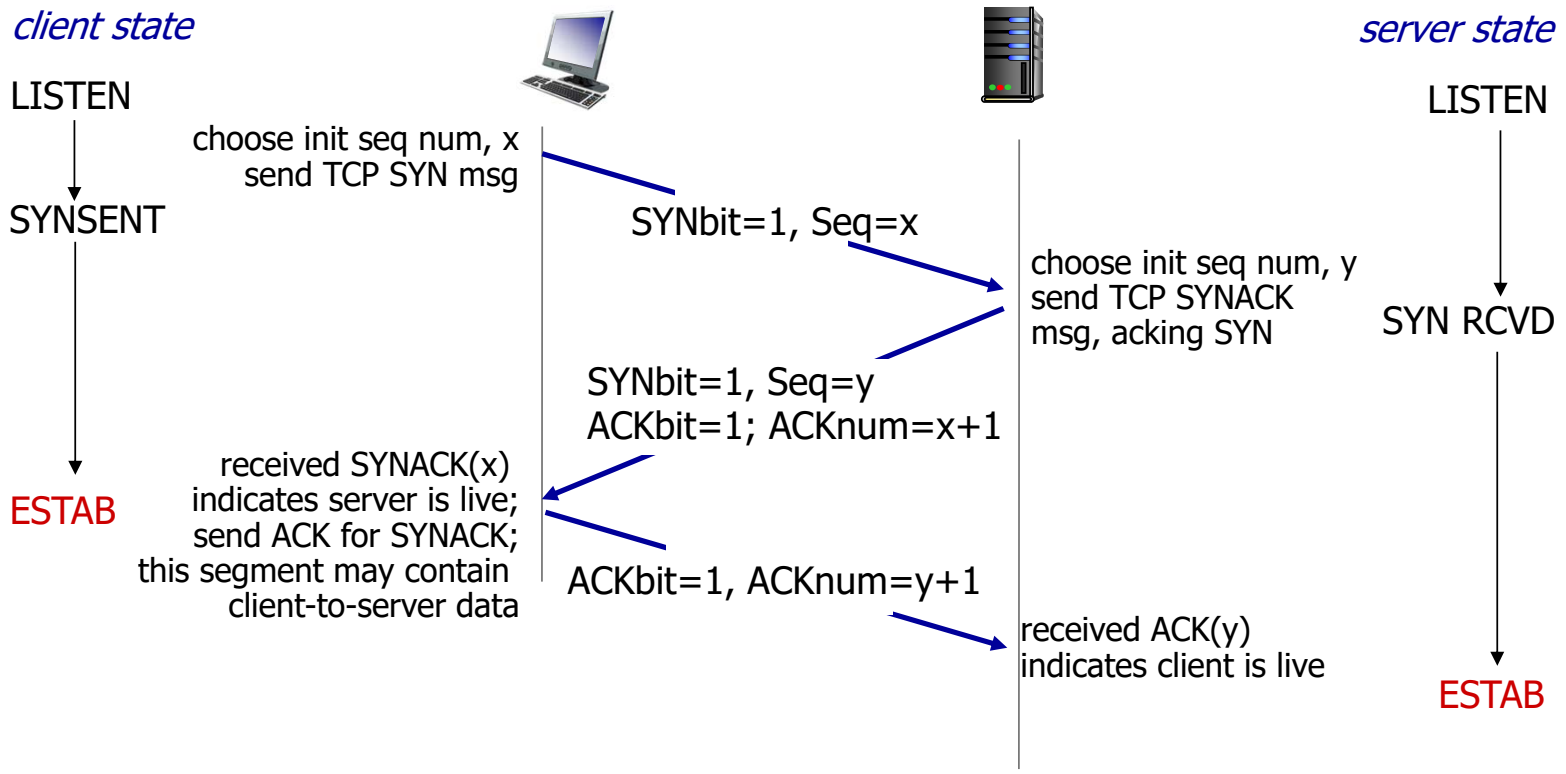

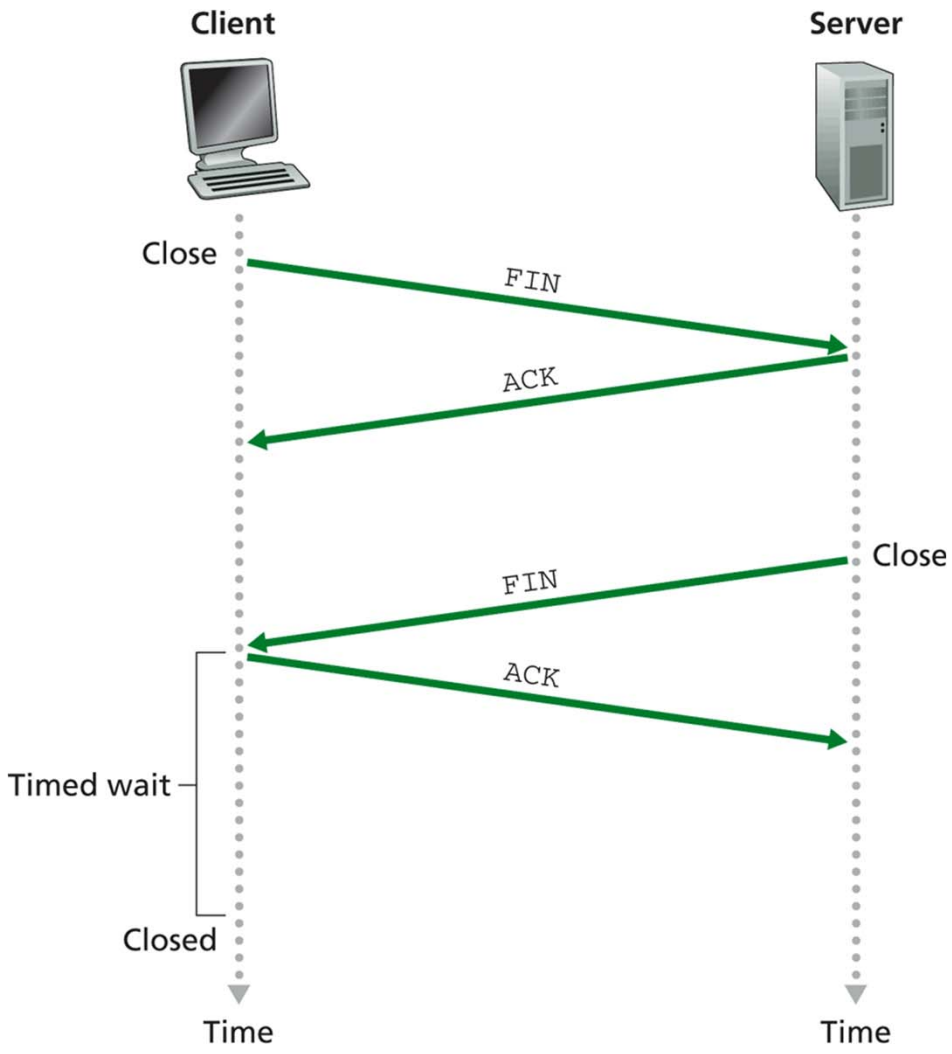

Figure 3.39 ♦ Closing a TCP connection

Go Back N

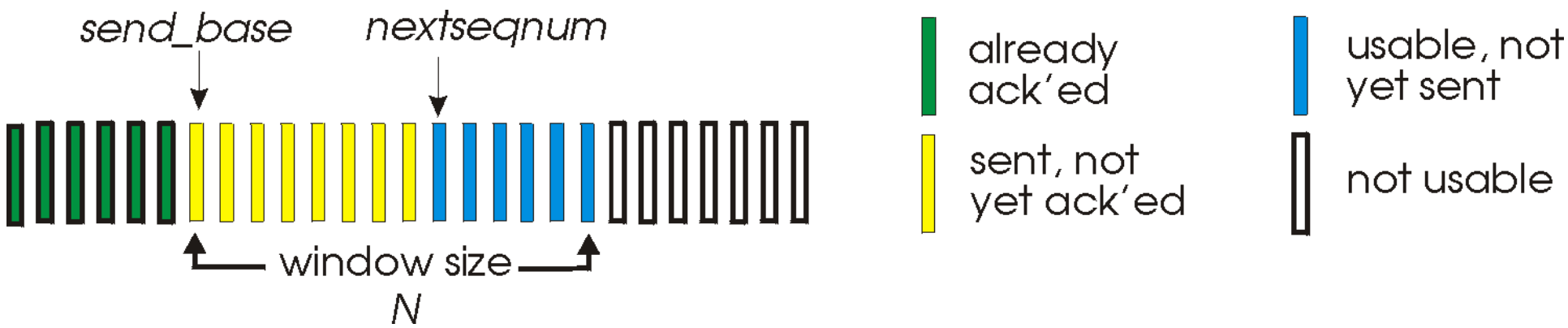
send_base
nextseqnum
window size
N
already ack'ed
sent, not yet ack'ed
usable, not yet sent
not usable

Selective Repeat

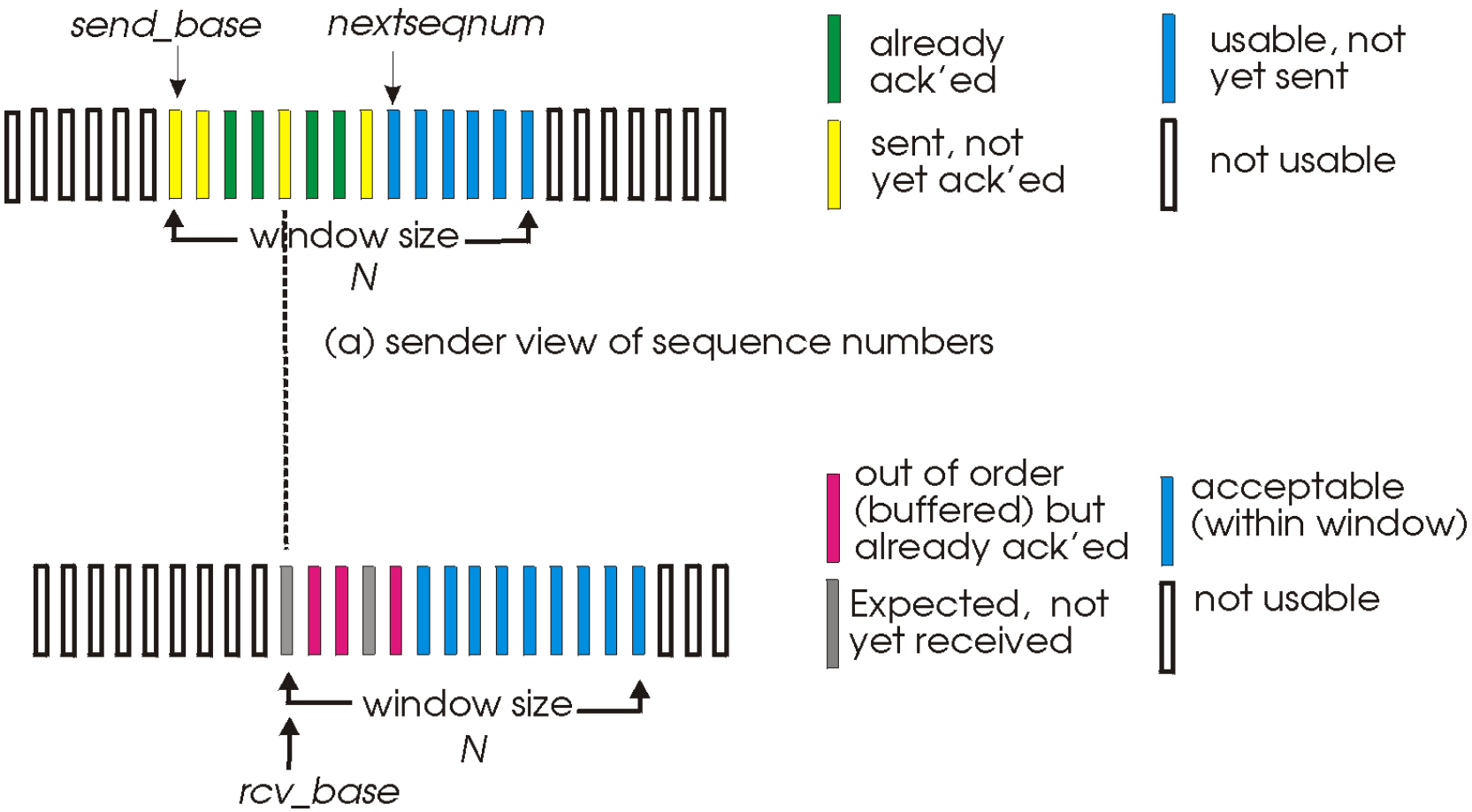

(b) receiver view of sequence numbers

TCP segment structure

TCP Header